MONTAGEINFORMATION

FAHRRAD-LIFT

INSTALLATION INFORMATION

INFORMATIONS CONCERNANT LE MONTAGE

MONTAGE-INFORMATIE

MONTERINGSINFORMATION

INFORMAZIONI PER IL MONTAGGIO

INFORMACIÓN DE MONTAJE

INFORMAÇÕES DE MONTAGEM

Bestell-Nr. 01 29 0 142 737 / Montageinformation
XI / 01
Printed in Germany
Gedruckt auf umweltfreundlichem Papier
(chlorfrei gebleicht, wiederverwertbar).

INSTALLATION INFORMATION

BICYCLE LIFT

EN

Notes on the installation information

Read this installation information carefully before you use the bicycle lift.
If you fail to follow the instructions in the installation information, the BMW Group cannot accept any liability and all warranty claims against the BMW Group will be rendered void.

Symbols used

denotes instructions of warnings that you must observe. ◂

denotes instructions that draw your attention to special features. ◂

◂ denotes the end of an instruction.

For your own safety

Only use parts and accessory products that have been approved for MINI cars.

The BMW Group cannot accept any liability for other products. ◂

Safety instructions

The roof load of 75 kg must not be exceeded (weight of the base holder plus bicycle lift (6.5 kg) plus bicycles).

The bicycle lift does not have any means to deter theft. A coiled lock can be used to deter theft of the bicycle and the bicycle lift. This is available from bicycle shops.

It is important to note that the car's handling will change because of the load. Avoid sudden braking, starting and fast cornering.

Adjust your speed to the objective conditions such as the condition of the road, road surface, side wind conditions, general traffic situation, etc. when carrying roof loads. We recommend that you adhere to the guide speeds.

Check and re-tighten screw connections on the bar and the load-bearing structures regularly. First do this after driving for a short distance and then at appropriate intervals (depending on the nature of the road surface and the length of use).

To save fuel and ensure the safety of other road users you should always take the bicycle lift off your car when it is not in use.

The bicycle lift is only allowed to be mounted on roof bar systems approved by the BMW Group.

General instructions

No more than two bicycle lifts are allowed to be mounted on one car (subject to the maximum roof load). When two bicycle lifts are fitted, they must be attached so the bicycles are facing in opposite directions.

When the bicycles have been loaded, make sure that no parts (e.g. handlebars, pedals, etc.) project beyond the outline of the car. Remove any panniers, bicycle pumps or similar parts fitted to the bicycle.

Close the sliding/tilting roof before mounting and using the bicycle lift.

PARTS KIT

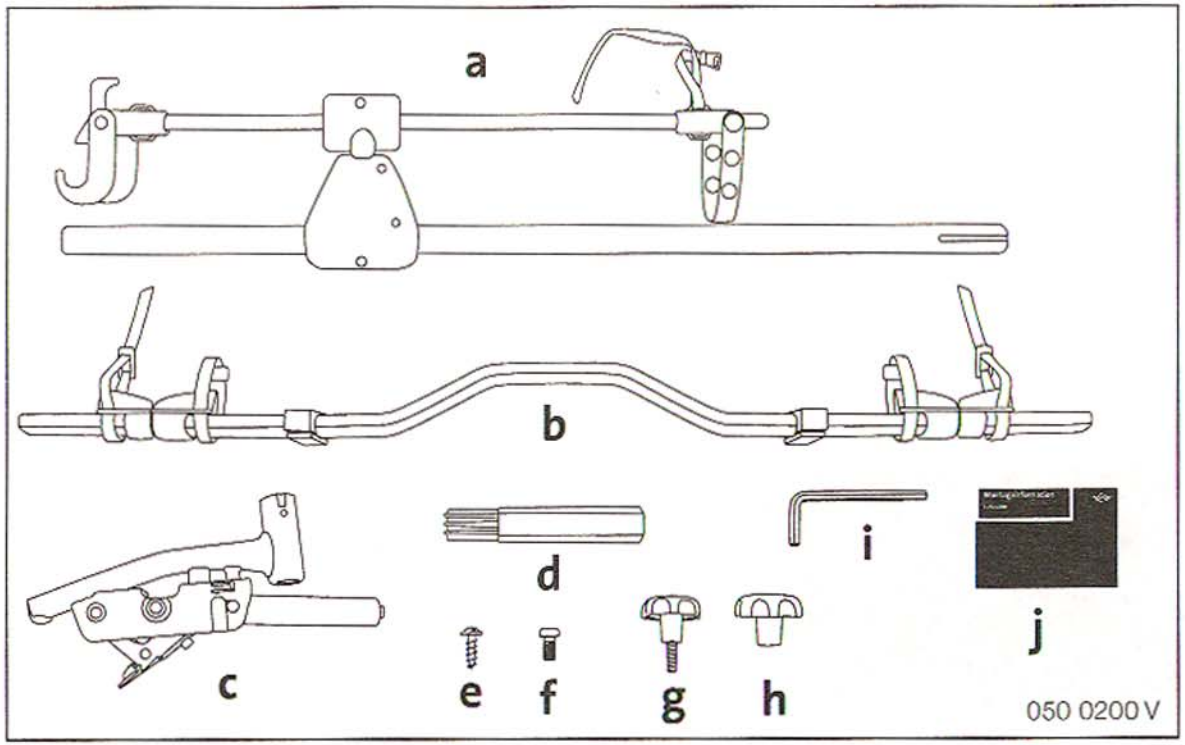

a	Supporting tube	1	h	Handlebar holder tommy nut	1
b	Crossmember	1	i	Allen key	1
c	Kinematic unit	1	j	Installation information	1
d	Crossmember end piece	2			
e	Crossmember end piece screw	2			
f	Kinematic unit screw	4			
g	Kinematic unit tommy screw	1			

TO INSTALL THE BICYCLE LIFT

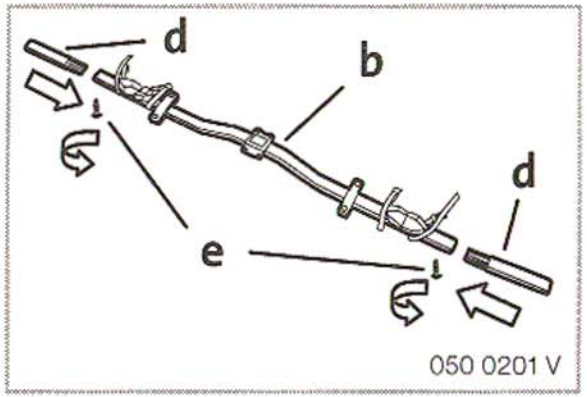

Insert the crossmember end pieces (d) into the crossmember (b) with their open ends downwards.

Secure the crossmember end pieces (d) using crossmember end piece screws (e).

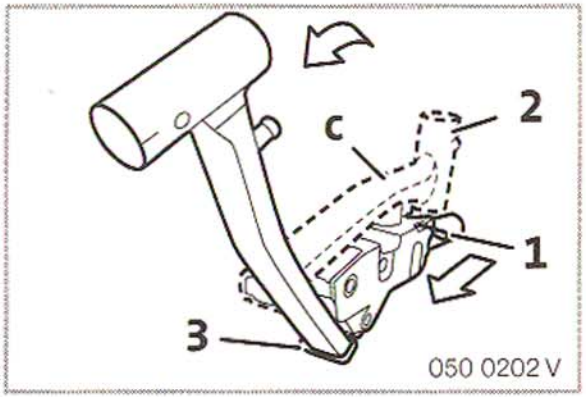

Unlock the spring clip (1) of the kinematic unit (c).
At the same time, fold the swivel tube (2) forwards. The swivel tube (2) must audibly clip into the decoupling piece (3).

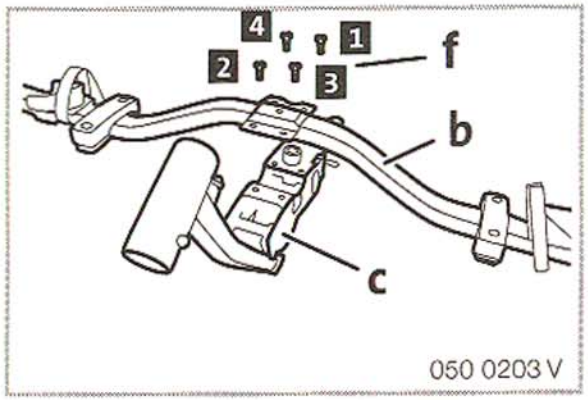

Position the crossmember (b) on the kinematic unit (c). Use the kinematic unit screws (f) to attach the crossmember (b) to the kinematic unit (c) in the specified sequence.

▷ Do not remove the kinematic unit screws (f) again after screwing them tight. ◁

TO INSTALL THE BICYCLE LIFT

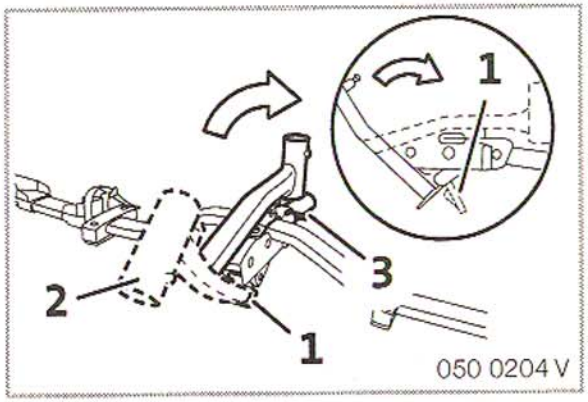

Operate the decoupling piece (1) and swivel the swivel tube (2) back to its starting position. The swivel tube (2) must audibly clip into the spring clip (3).

TO INSTALL THE BICYCLE LIFT ON THE ROOF BARS

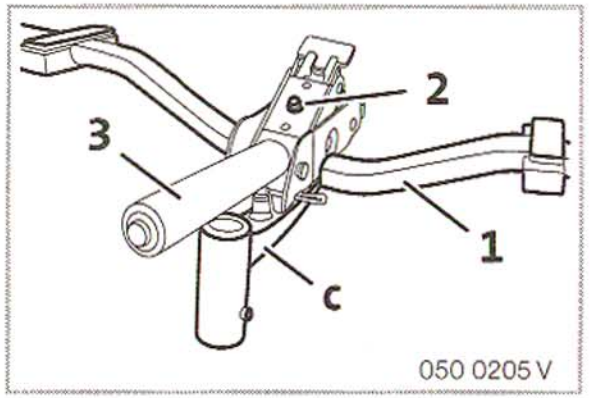

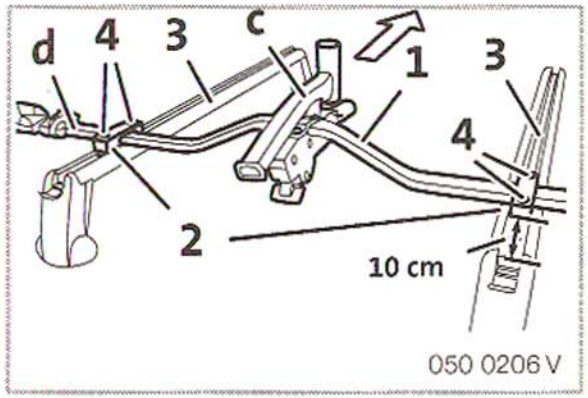

Turn over the bicycle lift (1). Unscrew and remove the locking screw (2) from the underside of the kinematic unit (c).
Keep the locking screw safe – do not lose it!

The preloaded gas spring (3) is now no longer locked. Do not hold the bicycle lift (1) by the kinematic unit (c). Danger of injury! ◂

Do not attach the bicycle lift (1) to the previously mounted roof bars (3) without securing it with the sliding blocks (2) (see the corresponding installation information for details). ◂

Push the bicycle lift (1) into both roof bars (3) at once.

Position the kinematic unit (c) in the middle between the roof bars (3). The sliding blocks (2) should be 10 cm from the end. Firmly tighten the Allen bolts (4) in the sliding blocks (2).

It must no longer be possible to move the bicycle lift (1). Do not fit the sliding blocks (2) onto the crossmember end pieces (d). ◂

TO MAKE THE PRELIMINARY SETTING OF THE SUPPORTING ARM

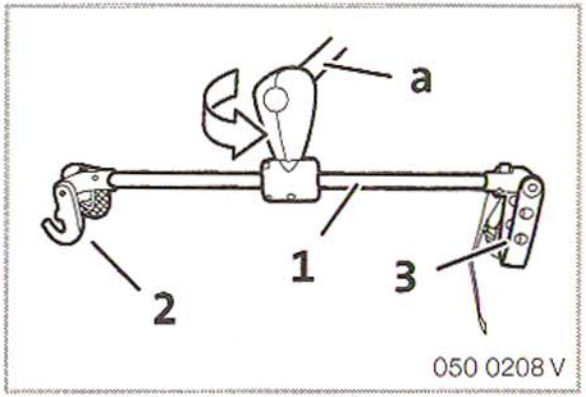

Swivel the supporting arm (1) with the handlebar (2) and saddle holder (3) through 90°. The supporting arm (1) must be perpendicular to the supporting tube (a).

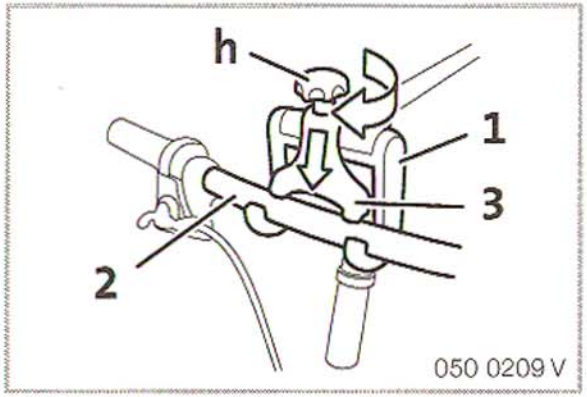

Screw the handlebar holder tommy nut (h) onto the grub screw of the handlebar holder (1) by 1 – 2 turns.

▷ Watch out for brake and gear cables, speedo cables, etc. when positioning the bicycle handlebars (2) in the handlebar holder (1). Do not kink them or get them clamped in. ◂

Fold the handlebar holder tommy nut (h) backwards, push the slide (3) up and hook the bicycle handlebars (2) into the handlebar holder (1). Push the slide (3) down, fold the handlebar holder tommy nut (h) forwards and screw it on tightly.

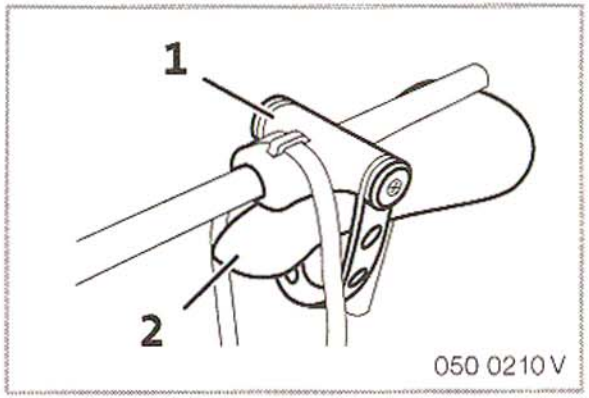

Push the saddle holder (1) forwards onto the nose of the saddle (2).

TO MAKE THE PRELIMINARY SETTING OF THE SUPPORTING ARM

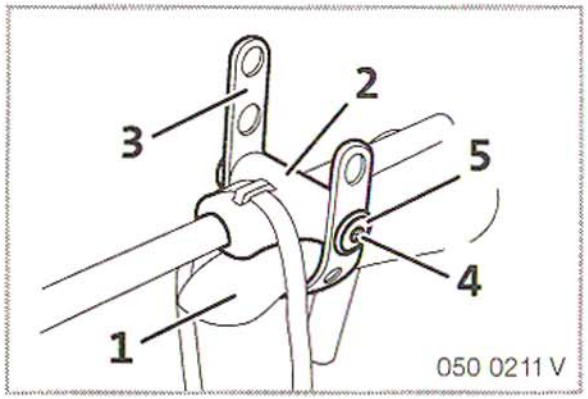

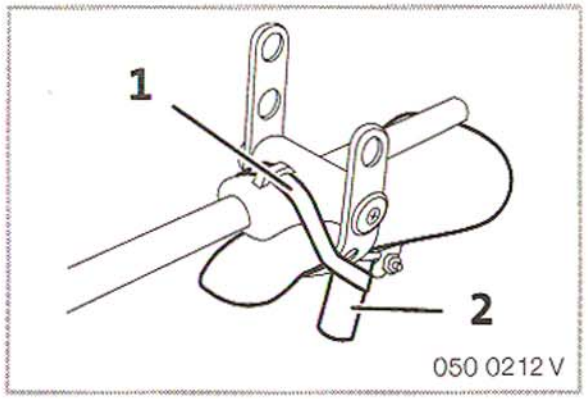

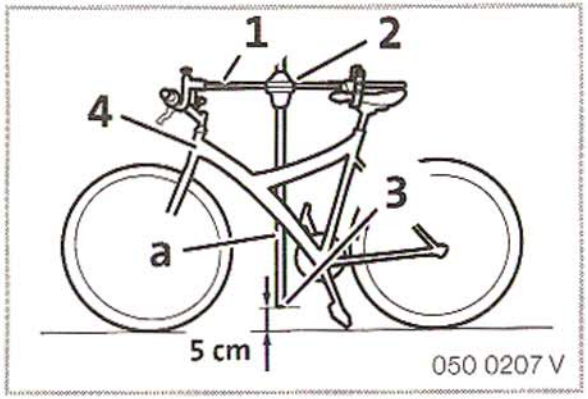

The nose of the saddle (1) must make close contact with the saddle holder (2). If this is not the case, adjust the loop (3) of the saddle holder.

Unscrew the bolts (4) on the side of saddle holder (2) in order to adjust the size of the loop. Remove the clamping piece (5) and set the optimum length.
Put the clamping piece (5) back in and screw tight.

To guarantee a secure hold, pass the retaining band (1) behind the seat pillar and strap it tight.

The supporting tube (a) must be at right angles to the ground. The supporting arm (1) must be at right angles to the supporting tube (a).
Adjust the saddle or the handlebar position if necessary.

Move the supporting tube (a) in the frame head (2) so the distance between the end of the supporting tube (3) and the ground is 5 cm.

Tighten the Allen bolt in the frame head (2) after making the adjustments.

Remove the bicycle (4) from the supporting tube.

TO MOUNT THE BICYCLE

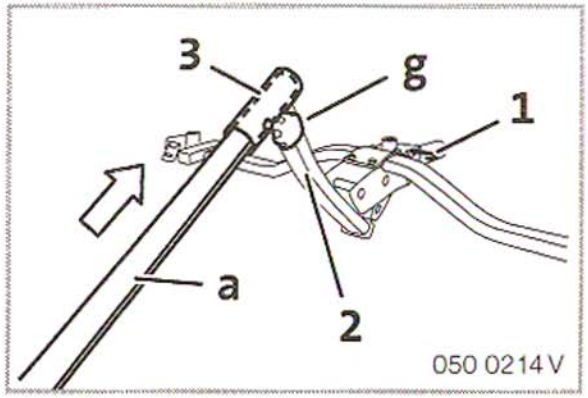

Unlock the spring clip (1). Pull the swivel tube (2) downwards until you hear it clip into place. Screw the kinematic unit tommy screw (g) into the hole provided by 1 – 2 turns.

Insert the preset supporting tube (a) without the bicycle into the supporting tube mount (3).

The supporting tube (a) must be pushed in up to the stop. ◂

Clamp the supporting tube (a) in place with the kinematic unit tommy screw (g).

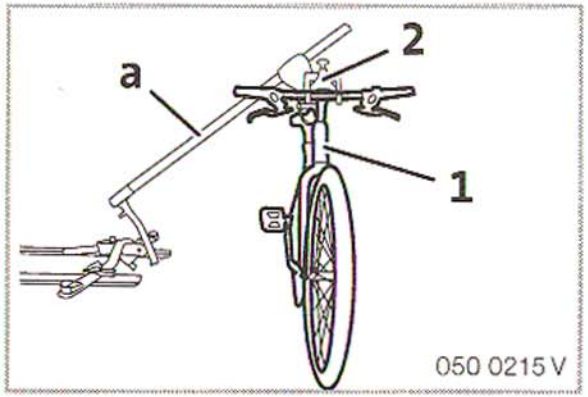

Attach the bicycle (1) to the supporting arm (2) of the supporting tube (a). Check whether the bicycle (1) is hanging level. If necessary, adjust the position by moving the supporting arm.

Lift the bicycle (1) until the supporting tube (a) has overcome the slack point of the kinematic mechanism. The bicycle (1) is now suspended.

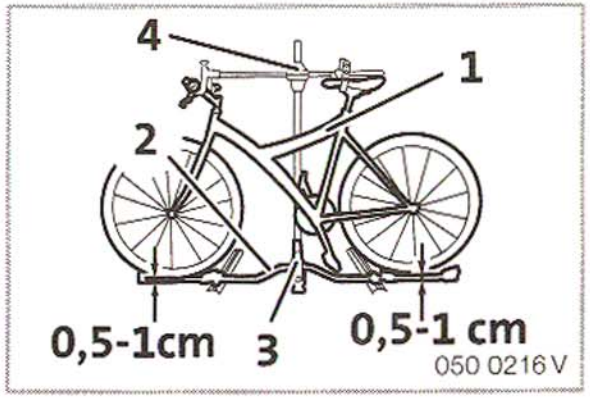

Use one hand, e.g. gripping the pedal bearing, to swing the bicycle (1) onto the crossmember (2). The swivel tube (3) must audibly clip into the spring clip at the top slack point.

The distance between the tyres and the crossmember (2) should be a few millimetres. Correct the distance if necessary. ◂

To correct the distance, swing the bicycle (1) down until the swivel tube (3) audibly clips in.

Unscrew the Allen bolt on the frame head (4), correct the distance and re-tighten.

TO REMOVE THE BICYCLE

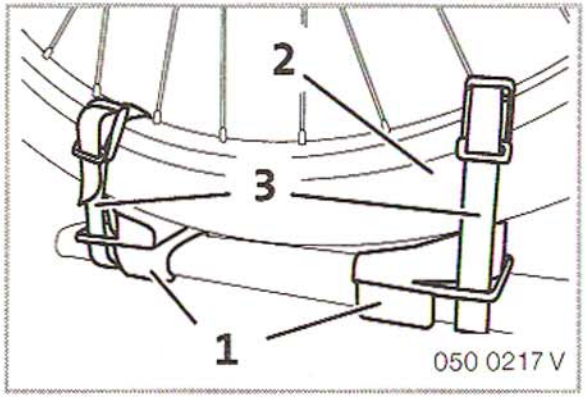

After swinging up the bicycle, push the wheel slippers (1) onto the tyres (2) and secure the wheels with tensioning straps (3).

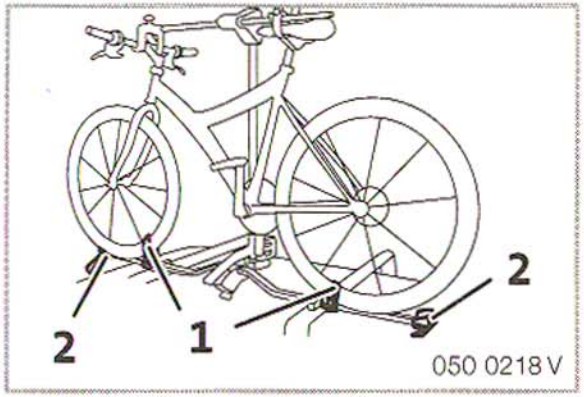

Unfasten the tensioning straps (1) and push the wheel slippers (2) apart on the front and back tyres.

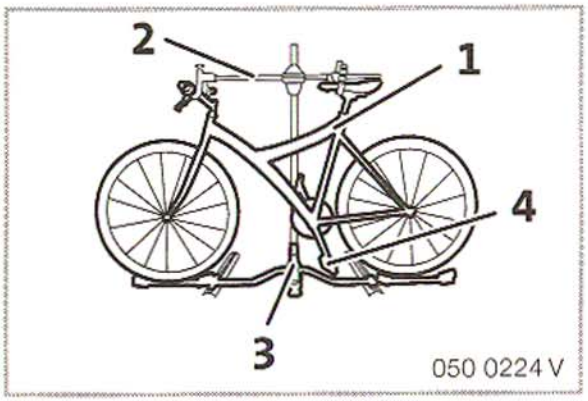

⚠ Keep as far clear from the bicycle as you can when swinging it down. Watch out for projecting parts such as pedals, handlebars, etc.

Never remove the bicycle (1) from the supporting arm (2) before the swivel tube (3) has engaged in the bottom position.◂

Unlock the spring clip. At the same time, grip the bicycle (1) by the pedal bearing (4) and swing it down against the force of the gas spring until you can hear and feel that the swivel tube (3) has clipped into place.

EN

TO REMOVE THE BICYCLE

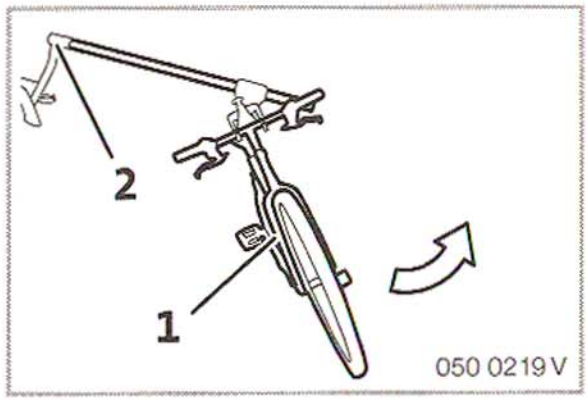

Pull the bicycle (1) away from the vehicle sideways in the direction of the arrow if the distance to the ground is insufficient to enable the swivel tube to engage.
The swivel tube (2) must audibly engage.

Remove the bicycle (1) from the handlebar and saddle holder.

TO REMOVE THE BICYCLE LIFT

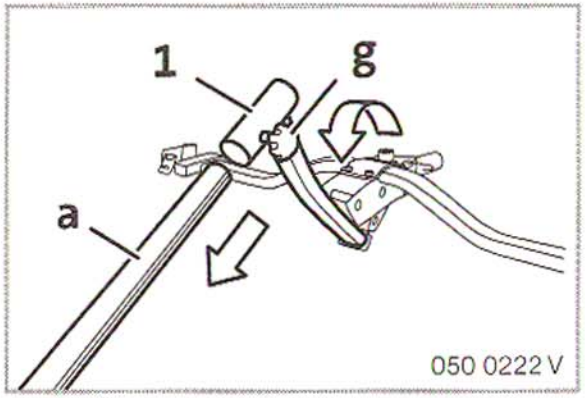

Unscrew the kinematic unit tommy screw (g) on the supporting tube mount (1) and remove the supporting tube (a).

For reasons of safety, the supporting tube (a) should always be removed after the bicycle has been transported.

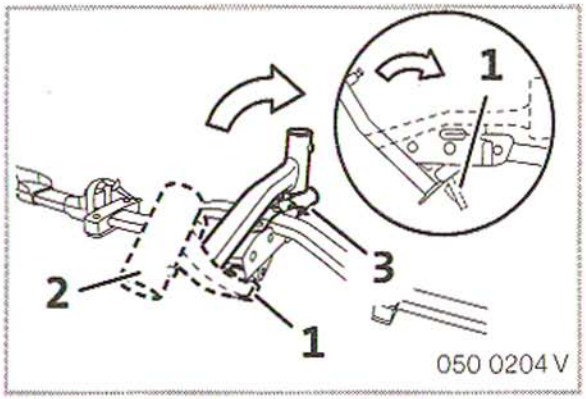

Operate the decoupling piece (1). At the same time, swing the swivel tube (2) upwards until it audibly clips into the spring clip (3).

TO REMOVE THE BICYCLE LIFT

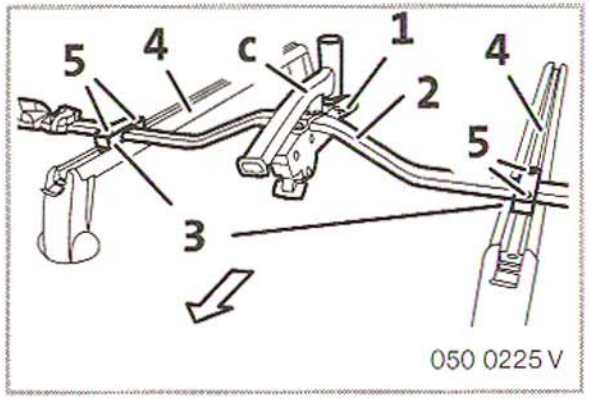

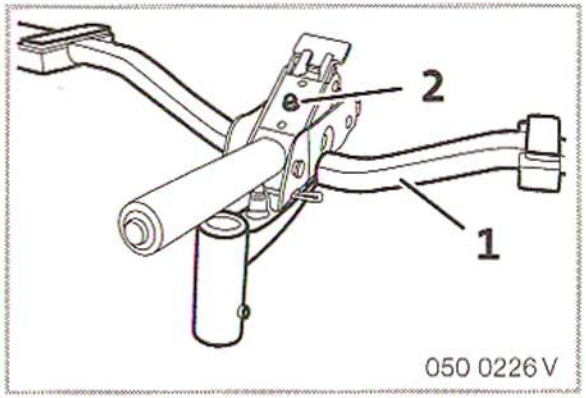

The preloaded gas spring (1) is not locked. Do not hold the bicycle lift (2) by the kinematic unit (c). Danger of injury! ◂

Unscrew the Allen bolts (5) from the sliding blocks (3). Pull the bicycle lift (2) out of the roof bar section (4).

Turn over the bicycle lift (1) and screw in the locking screw (2). See page 29.

Do not store the bicycle lift (1) without the locking screw (2) screwed in. ◂

TO HANDLE THE KINEMATIC UNIT

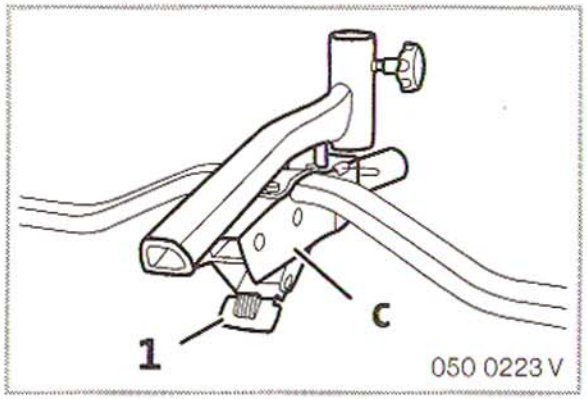

The kinematic unit (c) must be tensioned in order for the locking screw to be installed when storing the unit.

A mechanical shock or incorrect operation can cause the gas spring to expand suddenly. Danger of injury! ◂

You can tell when it is tensioned because the decoupling piece (1) is located in the bottom area of the kinematic unit (c).

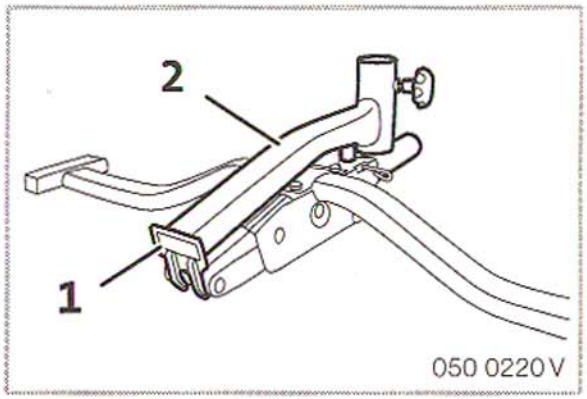

You can tell when it is expanded because the decoupling piece (1) is located in the swivel tube (2).

Proceed as follows if the gas spring has expanded:

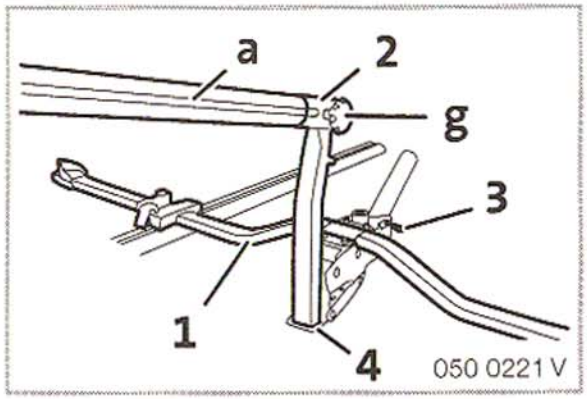

Mount the bicycle lift (1) on the roof bars (see the chapter entitled To install the bicycle lift on the roof bars). Insert the supporting tube (a) into the swivel tube (2).

The supporting tube (a) must be pushed in up to the stop. ◂

Clamp the supporting tube (a) in place with the kinematic unit tommy screw (g). Unlock the spring clip (3) and pull the supporting tube (a) to the bottom slack point until you can feel the swivel tube (2) engage. You have to apply extra force to achieve this. Unlock the decoupling piece (4) and fold the swivel tube (2) upwards until it audibly clips into the spring clip (3). (See the chapter entitled To remove the bicycle lift.)

Screw in the locking screw for storage purposes.